Rohs Compliance

REV	DESCRIPTION	DATE	BY
A	FIRST ISSUE		

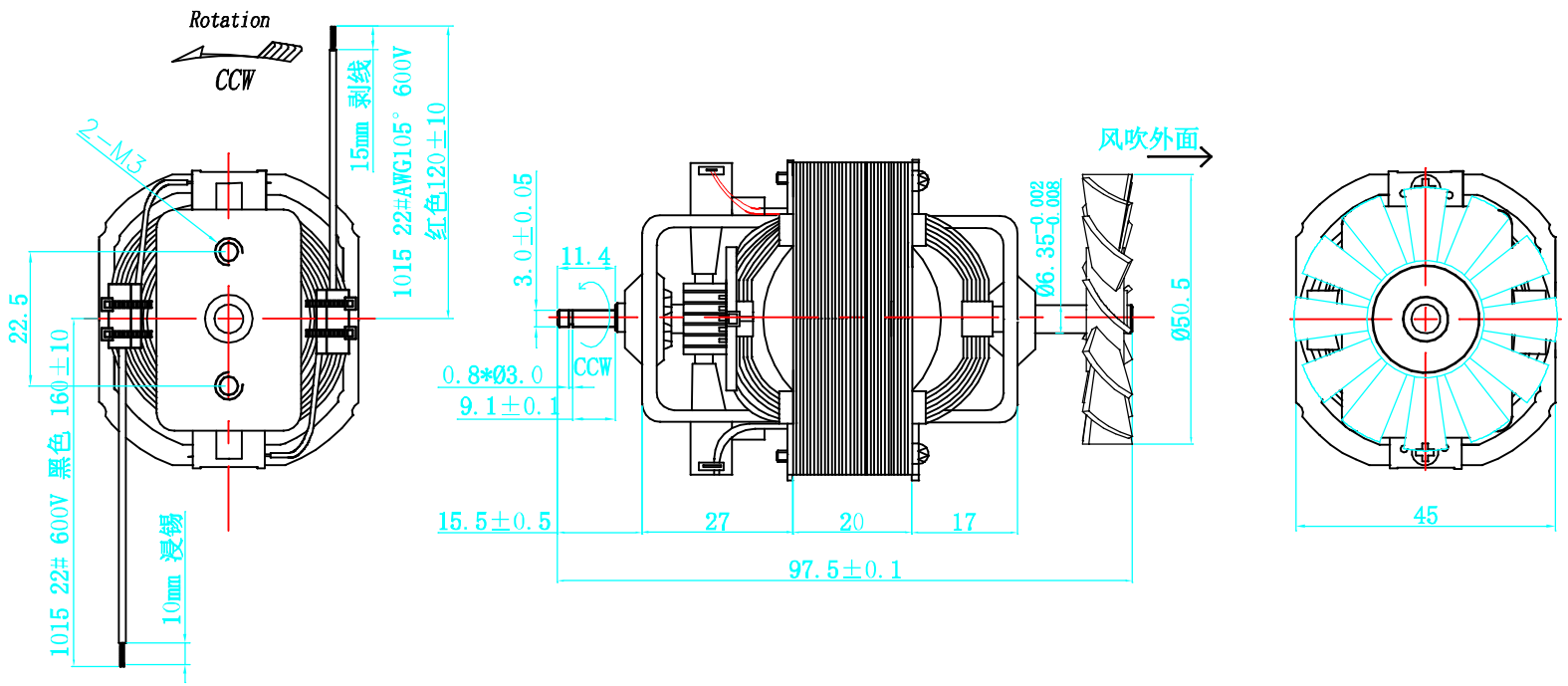

Notes:
1. Voltage with Frequency(电压和频率): 230V/50Hz
2. Rotation(转向):CCW
3. No-load Performance(空载性能)
No-load Speed(空载转速): 22000±15%
No-load Current (空载电流) : 0.5±15%
No-load Power (空载功率) :110±15%
4. On loadPerformance(负载性能)
On load Speed (负载转速) :
On load Current (负载电流) :
On load Power(负载功率)
5. Fuse or Thermostat(保险丝或者温控):
6. Temperture Rise(温升): 95°
7. Insulation Grade (绝缘等级) : ClassB
8. Withstand Voltage (耐压) :1500V/1Ma/1Sec
9. Life(寿命):
10. Noise(噪音):

CIRCUIT DIAGRAM:

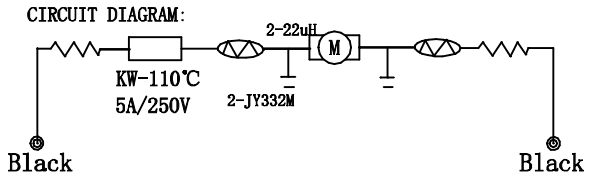

Label content:
OD-5420M230
230V/50Hz
MADE IN CHINA

GENERAL TOLERANCES ISO 2768-m								
Permissible deviations for linear dimensions								
	Permissible deviations for basic size range							
	>0.5 ...3	>3 ...6	>6 ...30	>30 ...120	>120 ...400	>400 ...1000	>1000 ...2000	>2000 ...4000
m	±0.1	±0.1	±0.2	±0.3	±0.5	±0.8	±1.2	±2
Permissible deviations for angular dimensions						Permissible deviations for broken edges (external radii chamfer heights)		
	Permissible deviations for ranges of lengths in millimeters of the shorter side of the angle concerned					Permissible deviations for basic size range		
	...10	>10 ...50	>50 ...120	>120 ...400	>400	>0.5 ...3	>3 ...6	...6
m	±1°	±0° 30'	±0° 20'	±0° 10'	±0° 5'	±0.2	±0.5	±1

DWN. BY	CHK. BY	APP. BY	
Date(yyyymmdd)	Date(yyyymmdd)	Date(yyyymmdd)	
MATERIAL:		A4	SCALE 3:1 / NOT SCALE
FINISH:			
General Tolerance ISO 2768-1 Class m (Unless specified)	TITLE		
ALL DIMENSIONS ARE IN MILLIMETRES	OD-5420M23		
SHENZHEN ODIN IMPORT AND EXPORT CO.,LTD	DWG NO. OD-5420M23	SHEET 1 OF 1	A